WarmlyYours
Be Connected.
Be Warm. Be Radiant.
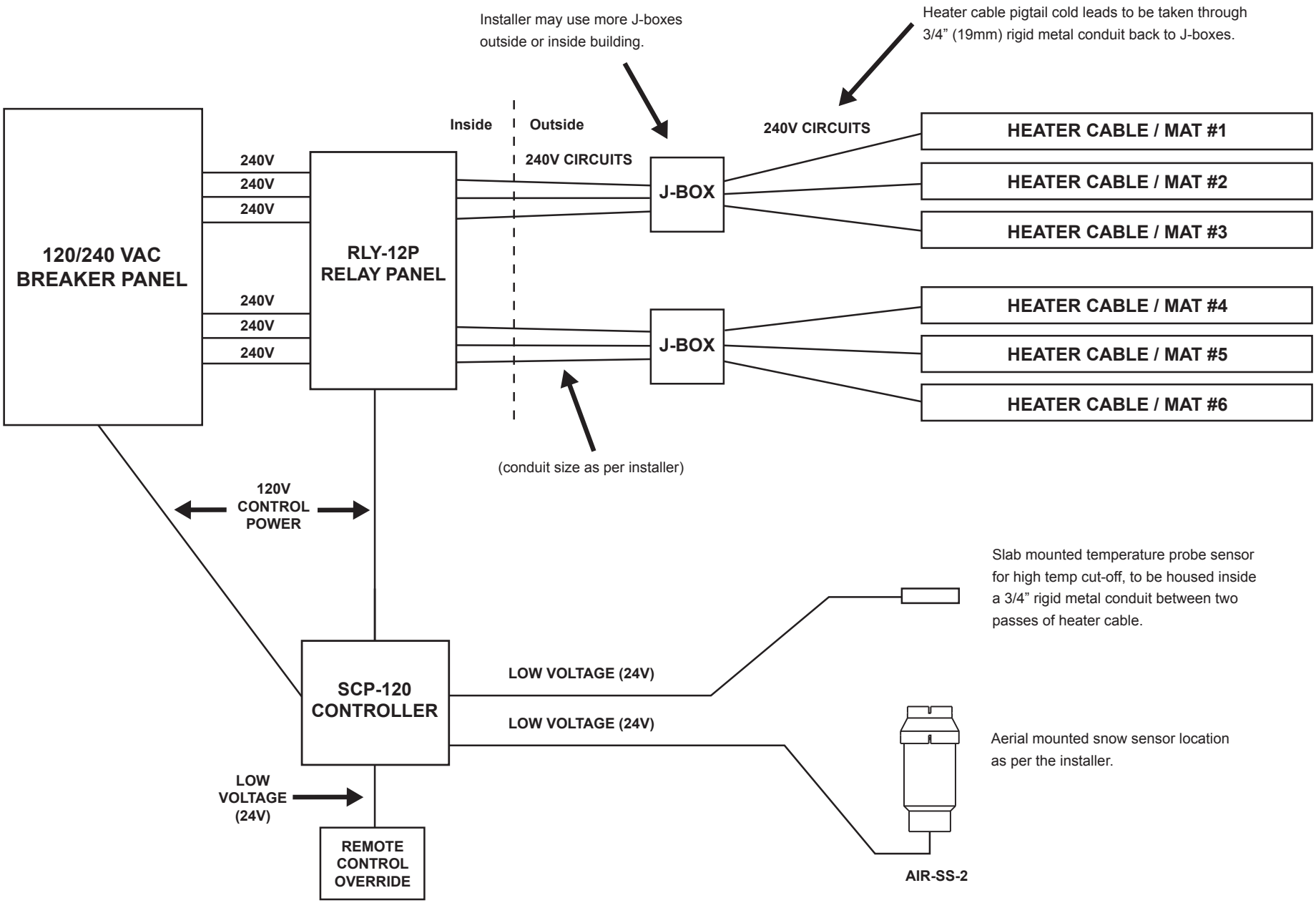
SNOW MELT DIAGRAM: 240V - TYPICAL LINE DIAGRAM (FOR 6 CIRCUITS/CABLES) WITH PREMIUM CONTROL